COGENT
"ALWAYS COMPLETE"

Cogent Computer Systems, Inc.
17 Industrial Drive, Smithfield RI 02917
tel: 401-349-3999, fax: 401-349-3998, web: www.cogcomp.com

CSB908 - I/O SITE EXPANSION MODULES

The CSB908 series of modules provides a variety of I/O interfaces to the CSB7xx-Kit. This datasheet provides specifications and block diagrams for the various modules. Please contact Cogent for the latest information as new modules may be under development.

CSB908RS2 - DUAL RS232 SERIAL I/O

- High ESD RS232 Buffers
- Selectable 8-Wire Modem Handshaking on UART 0
- Module is off in Low Power Mode (*LOW_PWR = 0)

CSB908RS4 - DUAL ISOLATED RS422/485 SERIAL I/O

- Selectable Full (RS422) or Half (RS485) Duplex Mode
- 3000V Isolated 5V Supply
- 10-Pin Screw Terminal Block Includes Isolated 5V and Ground
- Module is off in Low Power Mode (*LOW_PWR = 0)

CSB908POE - 24W POWER OVER ETHERNET

- National LM5070 PoE Interface with Integrated DC-DC Converter
- 550ma Current Limit allows up to 24W with Standard Power Source Equipment (PSE)
- Secondary Side Regulation via Opto-IsolatIon
- 19.5V @ 1.25A Output

CSB908BC1 - 2-CELL I-ION BATTERY CHARGER

- TI BQ24103 2-Cell @ 1 or 2 AMP Charger
- Automatic Pre-Charge and Trickle Charge
- External AC Adapter Input (9V Min., 16V Max.)
- Automatic Switchover Between Battery and AC Input
- Charging, Charge Done and AC Present Status LEDS

CSB908VIP - NTSC/PAL VIDEO INPUT PORT

- TI TVP5150 Video Decoder
- Selectable S-Video or Composite Video Input
- YUV 4:2:2 Output with Seperate or Embedded Syncs
- Module is off in Low Power Mode (*LOW_PWR = 0)
- Configurable via I2C with Optional Interrupt Output

CSB908I2S - I2S Codec with Touch Controller

- Wolfson WM8731 Audio Codec, MIC in, Line IN and Headphone Out
- TI ADS7843 SPI Touch Controller
- Touch Interface to CSB703 4.3" LCD for CSB7xx SOM's without AC97
- Module is off in Low Power Mode (*LOW_PWR = 0)
- Codec is Configurable via I2C

© 2008 Cogent Computer Systems, Inc., All rights reserved. Subject to change without notice. All trademarks are property of the respective owners.

CSB908RS2 - DUAL RS232 SERIAL I/O

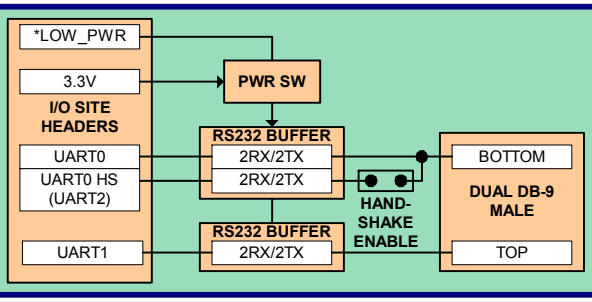

Specifications

- High ESD RS232 Buffers
- Selectable 8-Wire Modem Handshaking on UART 0 (If DCD, DTR, DSR and RI are on UART2)
- Module is off in Low Power Mode
- Standard I/O Site size of 1.20" x 2.10"

CSB908RS4 - DUAL ISOLATED RS422/485 SERIAL I/O

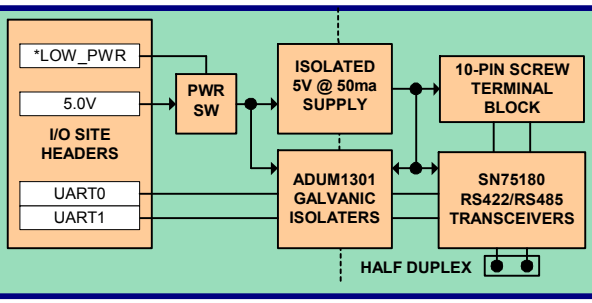

Specifications

- Module is off in Low Power Mode
- 3000V Isolation
- 10-Pin Screw Terminal Block Provides Access to all Signals plus Isolated Power and Ground
- Selectable Full (RS422) or Half (RS485) Duplex Mode
- Standard I/O Site size of 1.20" x 2.10"

CSB908POE - 24W POWER OVER ETHERNET

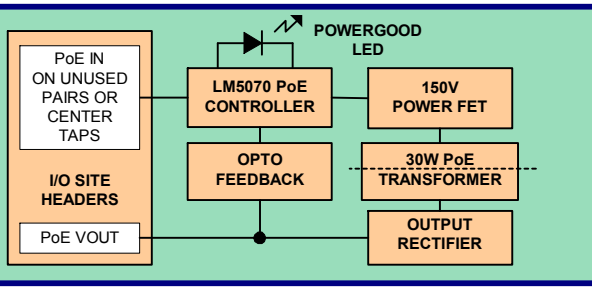

Specifications

- National LM5070 High Power PoE Controller
- 550ma Current Limit allows up to 24W
- Secondary Side Regulation via Opto-IsolatIon
- 19.5V @ 1.25A Output
- Standard I/O Site size of 1.20" x 2.10"

CSB908BC1 - 2-CELL L-ION BATTERY CHARGER

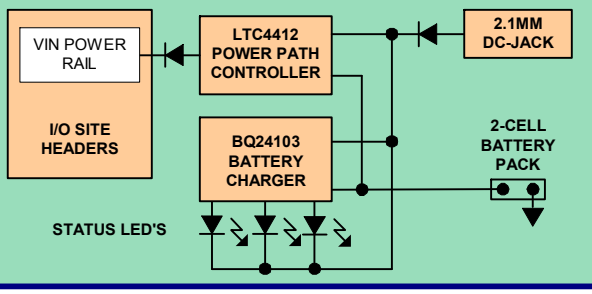

Specifications

- TI BQ24103 2-Cell @ 1 or 2 AMP Lithium-ION Charger
- Automatic Pre-Charge and Trickle Charge
- External AC Adapter Input (9V Min., 16V Max.)
- Automatic Switchover Between Battery and AC Input
- Charging, Charge Done and AC Present Status LEDS
- Standard I/O Site size of 1.20" x 2.10"

CSB908VIP - NTSC/PAL VIDEO INPUT PORT

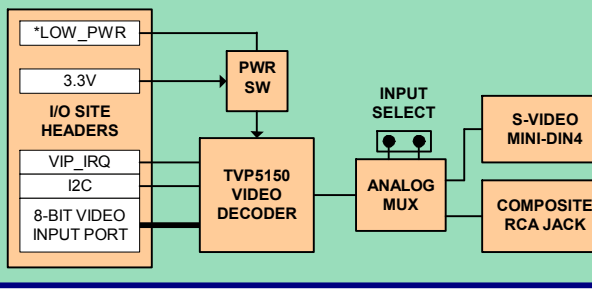

Specifications

- TI TVP5150 Video Decoder
- Selectable S-Video or Composite Video Input
- YUV 4:2:2 Output with Separate or Embedded Syncs
- Module is off in Low Power Mode
- Configurable via I2C with Optional Interrupt Output
- Standard I/O Site size of 1.20" x 2.10"

CSB908IS2 - IS2 FORMAT AUDIO CODEC

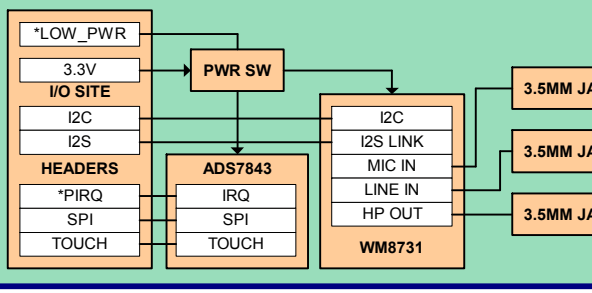

Specifications

- Wolfson WM8731 I2S Audio Codec with I2C Control
- 3.5mm Jacks for Microphone in, Line in and Headphone Out
- Module is off in Low Power Mode
- ADS7843 Touch Interface via SPI
- Standard I/O Site size of 1.20" x 2.10"

© 2008 Cogent Computer Systems, Inc., All rights reserved. Subject to change without notice. All trademarks are property of the respective owners.